ECE 530

High Performance VLSI IC Systems

Project Report

Low Power 10T SRAM Using Sleep Transistors and Drain Gating Techniques for Improved Performance

Sudhanvi Vakul Vakulabharanam

Student Id: A20549528

Mail: svakulabharanam@hawk.iit.edu

Abstract:

In this project, we have implemented a novel 10-transistor (10T) Static Random Access Memory (SRAM) cell designed for low power consumption, making use of sleep transistors and drain gating techniques to enhance performance. The need for energy-efficient electronics is growing, especially for embedded and portable devices, which has prompted the creation of SRAM cells with better performance and lower power consumption. Two essential methods that we have included in our proposed 10T SRAM cell are drain gating and sleep transistors. While the drain gating technique minimises dynamic power usage during read and write operations, the sleep transistors provide efficient power gating, minimising static power dissipation during standby mode. As a result, the cell's overall energy efficiency is increased due to its increased noise margin and decreased leakage current. By means of thorough modelling and analysis, we show that, in comparison to traditional 6T and Conventional 10T SRAM cells, our 10T SRAM cell achieves notable power savings while maintaining operational speed and stability. The cell is especially well-suited for uses where low power consumption is essential, like mobile computers, Internet of Things sensors, and battery-powered gadgets.

Introduction:

Static Random Access Memory (SRAM) is essential to high-performance computing and electronic applications because it can provide fast access times and is compatible with logic designs. SRAM is a favoured option in many applications due to its enhanced performance, lower power consumption, and smaller footprint as technology continues to scale down. Nevertheless, there are drawbacks to the smaller size, including heightened noise sensitivity and design instability. Because of these worries, there is a greater need to produce low-power memory elements because lowering supply voltage will cut down on leakage current and dynamic power.

For applications where energy efficiency is critical, such as wearable health monitors and other Internet of Things (IoT) devices, lowering the supply voltage is especially beneficial. Because of its high speed and low power consumption, SRAM is also widely utilised for cache memory, highlighting its significance in contemporary technology.

In this study, we provide a novel method that makes use of sleep transistors and drain gating approaches to improve the performance of 10-transistor (10T) SRAM cells. These cutting-edge techniques aim to maximise stability and power efficiency in cutting-edge memory architectures. To assess the 10T SRAM cell's performance, we use the Cadence Virtuoso Electronic Design Automation (EDA) tool in conjunction with the GPDK 45nm technology. Our analysis offers a thorough comparison with the traditional 6T SRAM cell by concentrating on both dynamic and static properties.

Our goal in doing this comparison research is to identify notable decreases in both static and dynamic power dissipation. The expected result of using the sleepy keeper and drain gating strategies is a significant reduction in leakage current. Both single-ended write and differential read operations are supported by this updated topology, which also shows a reduction in the read and write delay products—two important markers of improved performance.

The suggested architecture's main goals are to decrease leakage current, minimise latency, and increase stability. Specifically, the drain gating approach is used to control the current flow via the drain terminals in an efficient manner, hence enhancing the performance of SRAM cells. By using this method, the read and write delay products are significantly reduced, which improves the SRAM cell's overall performance.

The suggested 10T SRAM cell architecture, which combines these cutting-edge methods, provides a viable answer for high-performance and energy-efficient memory applications, meeting the changing demands of contemporary electronics. The knowledge acquired from this project advances our understanding of how creative memory designs can be created to satisfy the increasing demands of the quickly developing electronic technology industry for higher performance and reduced power consumption.

Historical Background:

A wide range of novel topologies, from 6-transistor (6T) to 12-transistor (12T) layouts, have been made possible by the ongoing advancement of SRAM technology. Each topology was created to address a particular problem and improve performance. Different operational needs, including differential read and write, single-ended read and write, and differential write with single-ended read, have been taken into consideration when creating these designs. Approaches

to reduce power dissipation, boost speed, and enhance stability while simultaneously optimising other crucial factors have been the subject of intense research.

Many notable contributions have been made to this endeavour, such as circuits optimised for read operations, circuits for write and read port decoupling, and circuits for improving write speed. Loop cutting is one technique that has been used to increase noise margin, which is an important factor in reliable SRAM operation. Different SRAM cell topologies have been created over time to solve problems like read static noise margin, read delay, and leakage power. Examples of these architectures are 7-transistor (7T), 8-transistor (8T), and 9-transistor (9T) cells.

The advancement of SRAM technology has been characterised by the introduction of diverse topologies with the intention of improving efficiency and resolving particular constraints. A wide range of inventive designs have resulted from the investigation of differential and single-ended processes as well as techniques for lowering power dissipation, increasing speed, and boosting stability. Noise margin has been increased and leakage current has been managed with the use of strategies like utilising p-p-n logic topologies, separating access transistors, and using sleep transistors. Furthermore, half-select problem solutions and data-aware power supply techniques have greatly decreased power usage.

Even with the significant advancements, persistent problems with sensing capacity and access time continue to drive the development of novel devices and assistive solutions. As new techniques are explored and integrated, SRAM technology will continue to advance and memory circuits will be able to fulfil the changing needs of high-performance applications. The continuous effort to provide effective, dependable, and high-performing memory solutions for a variety of electronic devices and applications is reflected in the developments in SRAM design.

Conventional 6T SRAM:

A form of volatile memory called static random access memory, or SRAM, is frequently utilised in high-speed applications such cache memories in microprocessors, networking hardware, and other digital systems. Because of its simplicity, speed, and very low power consumption, the 6-transistor (6T) SRAM cell has become a core building block among many SRAM architectures.

The 6T SRAM cell is a popular option in many different applications because it provides quick read and write operations and is generally more stable than other memory configurations.

Nevertheless, the 6T SRAM cell has a number of drawbacks due to the ongoing downscaling of technological nodes and the rising expectations for performance and power efficiency. Problems including decreased supply voltage stability, more noise susceptibility, and leakage currents have spurred researchers to look at new SRAM designs and creative ways to improve memory performance.

This paper explores the 6T SRAM cell's design, fundamental functions, and steady-state behaviour using the control signals BL, BLB, WR, Q, and QB. We also look at the 6T SRAM cell's limitations and talk about possible solutions to these problems.

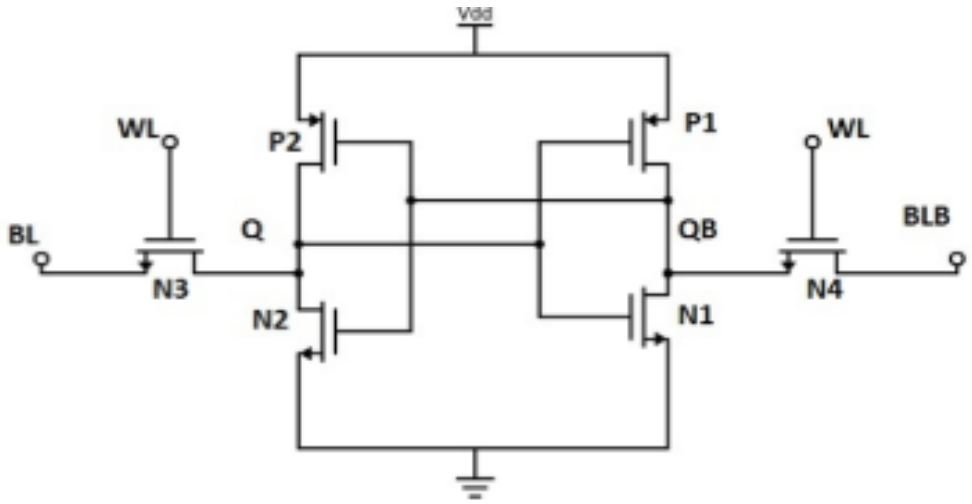

Conventional 6TSRAM Cell

Architecture of Conventional 6TSRAM:

Six transistors are grouped in a cross-coupled manner to make the 6T SRAM cell, which is a bistable latch that can store one bit of data. Included in the fundamental design are:

Cross-Coupled Inverters: Two cross-coupled inverters form the 6T SRAM cell's core. A PMOS and an NMOS transistor combine to form a stable latch in each inverter, which stores the binary data (Q and QB).

Access Transistors: Two NMOS access transistors that are regulated by the word line (WR) are present in the cell. During read and write operations, these transistors link the cell to the bit lines (BL and BLB).

Bit Lines: The bit lines (BL and BLB) carry the data to and from the cell. BL represents the main data line, while BLB is its complement.

Control Signals:

Bit Lines (BL and BLB): These carry the data to be read or written. BL holds the data and BLB holds its complement.

Word Line (WR): It is possible to read from and write to the cell because the word line regulates the access transistors.

Stored Data (Q and QB): These signals stand for the binary data that is kept in the cell as well as its complement.

Basic Operation & Steady State Table:

There are three main modes of operation for the 6T SRAM cell: write, read, and standby. The mode and behaviour of the cell are determined by the control signals BL, BLB, WR, Q, and QB. The steady-state table that follows shows how the cell behaves in various operating modes:

Operation	`BL`	`BLB`	`WR`	`Q`	`QB`
Standby	`X`	`X`	`0`	`1` or `0`	`0` or `1`
Read `1`	`1`	`0`	`1`	`1`	`0`
Read `0`	`0`	`1`	`1`	`0`	`1`
Write `1`	`1`	`0`	`1`	`1`	`0`
Write `0`	`0`	`1`	`1`	`0`	`1`

Standby Mode: In standby mode, the cell retains its stored value. The WR signal is set to 0, which prevents access to the cell for read or write operations. The values of BL and BLB have no significance because X indicates a "don't care" circumstance. One of two possible values for the data (Q and QB) in the cell is 0.

Read Mode: When the cell is in read mode, the bit lines BL and BLB get the stored value. Since the WR signal is set to 1, the read operation is enabled. If the cell has a 1, Q is 1 and QB is 0, there will be a high BL and a low BLB. On the other hand, if the cell has a 0, Q is 0 and QB is 1, the outcome is a low BL and a high BLB.

Write Mode: When the cell is in write mode, new data is written to it. When the WR signal is set to 1, the write operation is enabled. If the desired value is 1, Q is forced to 1 and QB to 0 when BL is set to 1 and BLB to 0. The intended value is zero when BL is set to zero and BLB is set to one, pushing Q to zero and QB to one.

Limitations of the 6T SRAM Cell

Stability Issues: Stability problems may arise with the 6T SRAM cell, especially at lower supply voltages. Potential data corruption may result from external noise or voltage fluctuations disrupting the positive feedback loop formed by the cross-coupled inverters.

Increased Sensitivity to Noise: The 6T SRAM cell's sensitivity to noise increases with decreasing technology. Read and write failures may result from this sensitivity, particularly when there is noise from the power supply or cross-coupling from nearby cells.

High Leakage Power: High leakage power is a problem for the 6T SRAM cell, particularly in deep submicron technologies. Even in standby mode, this leakage current happens, which raises power consumption and shortens the life of batteries in portable electronics.

Read Disturb Issues: The 6T SRAM cell may have read disturbance problems during read operations, in which case reading the cell modifies the data that has been stored. The internal inverter and access transistor are at odds, which might cause data corruption. This problem results from this.

Limited Scalability: Scalability of the 6T SRAM cell is restricted, especially at lower technological nodes. The design of the transistors and interconnects gradually takes up space in the cell, reducing the total number of memory cells that may be created.

Write Failure: Write failures are a possibility with the 6T SRAM cell, especially at lower supply voltages. To modify the stored data, the access transistors must overcome the internal inverters

during write operations. This can get difficult at low voltages and possibly result in writing failures.

With its quick read and write times and low power consumption, the 6T SRAM cell is still a vital component of digital electronics. It does, however, have a number of drawbacks, such as instability problems, noise sensitivity, high leakage power, read disturbance problems, restricted scalability, and write failures. Novel approaches like read/write decoupling, alternate topologies, assist techniques, power gating, and adaptive voltage scaling are needed to overcome these constraints.The constant requirement for memory solutions that are both high-performing and energy-efficient is reflected in the continued development of SRAM technology. Through tackling the constraints of the 6T SRAM cell, scientists can create more resilient and dependable memory architectures that satisfy the needs of contemporary electronic applications.

Conventional 10T SRAM:

High-speed digital electronics need the use of Static Random Access Memory (SRAM), especially in situations where quick access to stored data is critical. Fast read and write times of SRAM cells make them an essential component of many devices, from microprocessors to portable electronics. Although the conventional 6-transistor (6T) SRAM cell has been in widespread usage, various topologies have evolved in response to technological breakthroughs and the growing need for high-performance, energy-efficient memory solutions.

The 10-transistor (10T) SRAM cell has attracted a lot of interest because of its better noise margins, lower leakage current, and increased stability. To overcome some of the drawbacks of 6T and 8T SRAM cells, especially in low-power applications, this cell layout adds more transistors. The 10T SRAM cell is a flexible choice for contemporary digital systems since it performs well in differential and single-ended applications.

Architecture of Conventional 10SRAM:

By adding four more transistors to the conventional 6T architecture, the 10T SRAM cell improves the stability and performance of the device. Two cross-coupled inverters make up the core structure and together they produce a bistable latch that stores the binary data. Access

transistors are another feature of the cell that enable the cell's connection to the bit lines for read and write operations.

Cross-Coupled Inverters: A bistable latch is created by cross-coupling two pairs of PMOS and NMOS transistors, and it is this latch that saves the data (Q and QB).

Access Transistors: During read and write operations, the cell is connected to the bit lines via two NMOS transistors (N1 and N2).

Additional Transistors: N3, N4, P1, and P2 are the four extra transistors added to increase performance and stability. These transistors contribute to improved noise margins and reduced leakage by assisting in the regulation of current flow during read and write operations.

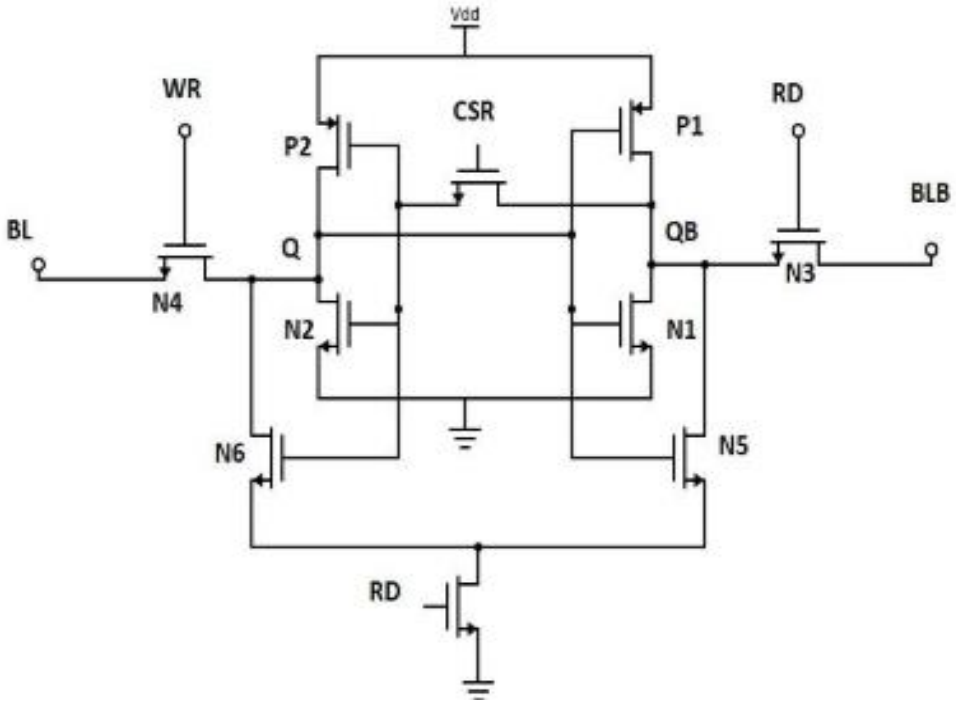

Conventional 10TSRAM Cell

Control Signals:

Bit Lines (BL and BLB): These signals carry the data to be read or written. BL represents the data line and BLB is its complement.

Read Enable (RD): The data contained in the cell can be output to the bit lines thanks to this signal, which regulates the read operation.

Write Enable (WR): The write operation is managed by this signal, which permits fresh data to be written into the cell.

Chip Select Read (CSR): This signal activates the cell for read operations.

Stored Data (Q and QB): These signals represent the binary data stored in the cell and its complement, respectively.

Basic Operation & Steady State Table:

The 10T SRAM cell may function in three major modes: write, read, and standby. BL, BLB, RD, WR, CSR, Q, and QB are the control signals that determine the cell's mode and behaviour. The following steady-state table illustrates the behaviour of the cell in different operation modes

Operation	`BL`	`BLB`	`WR`	`Q`	`QB`
Standby	`X`	`X`	`0`	`1` or `0`	`0` or `1`
Read `1`	`1`	`0`	`1`	`1`	`0`
Read `0`	`0`	`1`	`1`	`0`	`1`
Write `1`	`1`	`0`	`1`	`1`	`0`
Write `0`	`0`	`1`	`1`	`0`	`1`

Standby Mode: The cell keeps its stored value when it is in standby mode. The cell cannot be accessed for read or write because both the RD and WR signals are set to 0. Additionally, the CSR signal is set to 0, denoting the inactive state of the cell. Since X denotes a "don't care" situation, the values of BL and BLB are meaningless.

Read Mode: The bit lines BL and BLB receive the cell's stored value while it is in read mode. The read operation is enabled since the RD and CSR signals are both set to 1. The output on the bit lines is determined by the stored values (Q and QB). There will be a high BL and a low BLB if the cell contains a 1, Q is 1 and QB is 0. In contrast, a low BL and a high BLB result if the cell contains a 0, Q is 0 and QB is 1.

Write Mode: The cell is written with fresh data when it is in write mode. The write operation is enabled since the WR and CSR signals are both set to 1. The bit lines BL and BLB are applied with the new data that has to be written. BL is set to 1 and BLB is set to 0 if the desired value is

1. BL is set to 0 and BLB is set to 1 if the desired value is 0. In accordance, the signals Q and QB are updated.

Limitations of the 10T SRAM Cell:

Increased Area: Compared to the traditional 6T SRAM cell, the 10T SRAM cell requires more transistors, which leads to a larger cell area. This extra space may restrict the density of SRAM cells on a chip, which is important for applications that need a lot of memory.

Higher Dynamic Power Consumption: The 10T SRAM cell's extra transistors may result in a greater dynamic power consumption during read and write operations. This higher power consumption may be an issue for battery-powered gadgets and other applications where energy economy is vital.

Increased Design Complexity: Additional design issues are brought up by the 10T SRAM cell's more intricate construction. To strike a balance between performance, stability, and power consumption, the cell's design and layout must be carefully considered.

Potential Stability Issues: Even though the 10T SRAM cell is made to increase stability, it can still have stability problems, especially when the supply voltage is low. Reliability of the cell may be impacted by these problems, particularly in low-voltage operation situations.

Reduced Access Time: Because there are more transistors and control signals needed for the read and write operations, the 10T SRAM cell may have a longer access time than the 6T SRAM cell. High-speed applications may be limited by this shortened access time.

Sensing Capacity Reduction: The 10T SRAM cell's sensing capacity—the ability of the cell to distinguish between stored data values during read operations—may be impacted by its greater complexity. The performance of the cell may be impacted by this decreased sensing capacity, especially in loud surroundings.

Compared to conventional 6T and 8T SRAM cells, the 10T SRAM cell has a number of advantages, most notably better stability and lower leakage current. It does, however, come with a number of drawbacks, such as a larger surface area, a greater dynamic power consumption, a more complex design, possible stability problems, a shorter access time, and a decrease in sensing capability. It will take further study and development to overcome these constraints and

improve the cell's functionality so that it can be used in more situations. Innovative solutions like support plans and non-traditional gadgets will be essential in resolving the 10T SRAM cell's drawbacks and guaranteeing that it stays a feasible choice for high-performance and energy-efficient memory solutions as technology develops.

Significance of Proposed method(Low Power 10T SRAM Using Sleepy Keeper and Drain Gating Techniques):

A better version of the conventional 6-transistor (6T) Static Random Access Memory (SRAM) cell, the 10-transistor (10T) SRAM cell was created to solve problems including increased leakage current, decreased stability, and noise susceptibility as technology scales down. While the traditional 10T SRAM cell tends to consume more power, it provides better stability and noise margins.

The goal of the low-power 10T SRAM cell with drain gating and sleep transistors is to increase the efficiency of the traditional 10T design even more. By severing the cell from the power source while in standby mode, sleep transistors drastically lower static power usage. By reducing dynamic power consumption during read and write operations, the drain gating technique improves performance while preserving the stability of the cell.

Compared to traditional 10T SRAM cells, the low-power 10T SRAM cell that uses sleep transistors and drain gating techniques has several advantages. These improvements are especially significant for applications where performance and power economy are vital, like embedded systems, battery-operated portable devices, and Internet of Things applications. The enhancements contribute to resolving important issues related to decreasing technology nodes, which makes this low-power design a desirable choice for electronic devices of the future.

This paper's main goal is to use sleep transistors and drain gating techniques to create a low-power 10T SRAM cell. To do this, we used Drain Gating and Sleepy Keeper techniques. These techniques reduce the amount of static power used. A second pair of NMOS and PMOS transistors connects the circuit to the earth in the Sleepy Keeper method, while PMOS and NMOS transistors connect the circuit to the power source. Two assistance transistors, P5 and P6, are managed by the output in order to handle data retention difficulties. Two sleep transistors are positioned between the pull-up and pull-down networks in the drain gating technique. The

second NMOS transistor is connected to the Pull-Down Network's output, while the PMOS sleep transistor is attached to the Pull-Up Network's output. Because both transistors are controlled externally, the drain gating technique works even better.

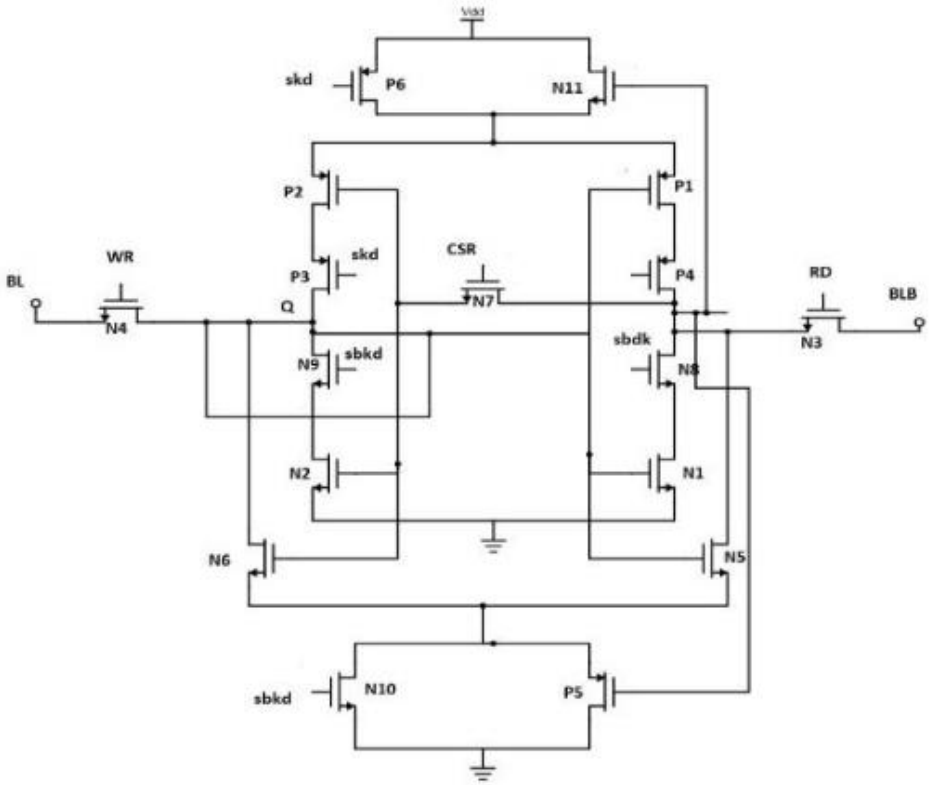

Low Power 10T SRAM Using Sleepy Keeper and Drain Gating Techniques

The suggested circuit can read and write data in two different ways. Transistors P3, P4, N8, and N9 are used with the Drain Gating approach when reading, and N1 is enabled and conductive when writing since the CSR feedback loop becomes weaker.

Transistors N7 and N3 are activated by control signals for reading, and buffer stack transistors N5 and N6 are used. N8 and N9 receive high power signals, whereas P3 and P4 supply low power signals. While P2, P3, P4, N1, N8, and N9 enable the operation, transistors N2, N6, and P2 are off during reading.A strong WR signal allows the desired action to be enabled while writing, with the read and control signals being decreased. N5 and N6 are unable to sink current, although N1 can conduct. Point Q stores the data directly from BL, while QB stores the opposite value. The reading buffer transistors in this suggested design remove the problem in access transistor sizing (ATS). Similar to traditional 6T SRAM, pull-up transistors P1 and P2 are

weakened to facilitate the write process. Larger read currents and faster access times are made possible by the read buffer transistors (N5 and N6) and transistor N8 (read stack) in the cell discharge path. Access transistors (N3 and N4) are highly active to improve conduction between the accessed cell and BL during both read and write operations.

Simulation:

Using GPDK 45nm technology in the Cadence Virtuoso EDA, I will first examine the properties of the traditional 6T SRAM in both read and write operation modes. The amount of power used in each operation would be my primary concern. Next, I would like to record the same parameters for the traditional 10T SRAM and compare the power dissipation and noise margin of the outputs from the 10T and 6T SRAMs. The standard 10T SRAM configuration would, as was to be expected, dissipate a substantial amount of power. After that, in order to lower the power consumption of the modified 10T SRAM, I will apply the Drain Gating approach to the regular 10T SRAM and compare the outcomes.

Drain Gating Technique:

The drain gating technique in SRAM design helps to enhance memory cell performance and stability, particularly during read operations. In order to maximise the performance of the SRAM cell under various operating conditions, the voltage at the drain terminals of individual transistors within the cell must be adjusted. When in reading mode, transistors P3, P4, N8, and N9 in the provided circuit description are subject to the drain gating technique. These transistors most likely play key roles in data retrieval and transmission from the memory cell during the reading process.

Sleepy Keeper Technique:

The Sleepy Keeper technique is a low-power design strategy used in digital circuits to decrease power consumption in standby or idle modes. It is particularly useful for battery-operated devices or systems where lowering power usage is necessary to increase battery life. To put it simply, by "putting to sleep" or selectively shutting certain circuits while not in use, the Sleepy Keeper technique lowers power consumption. To do this, a combination of sleep transistors and keeper circuits is used.

Results:

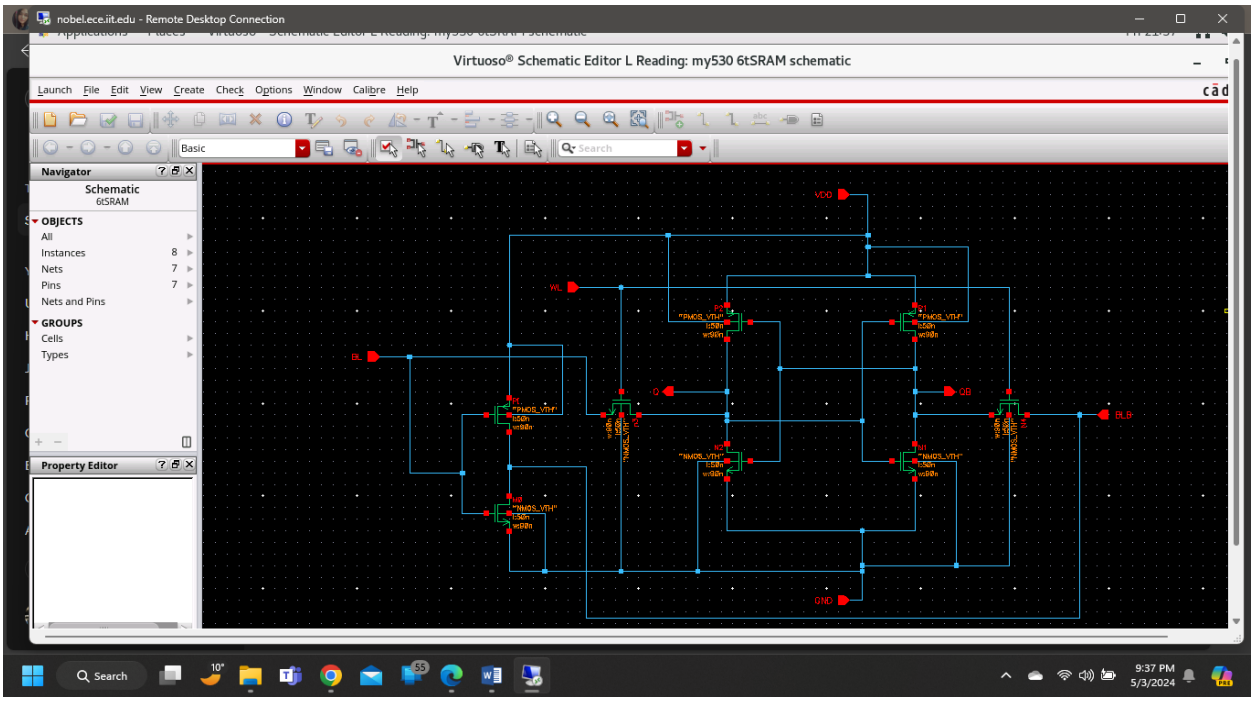

6TSRAM Schematic

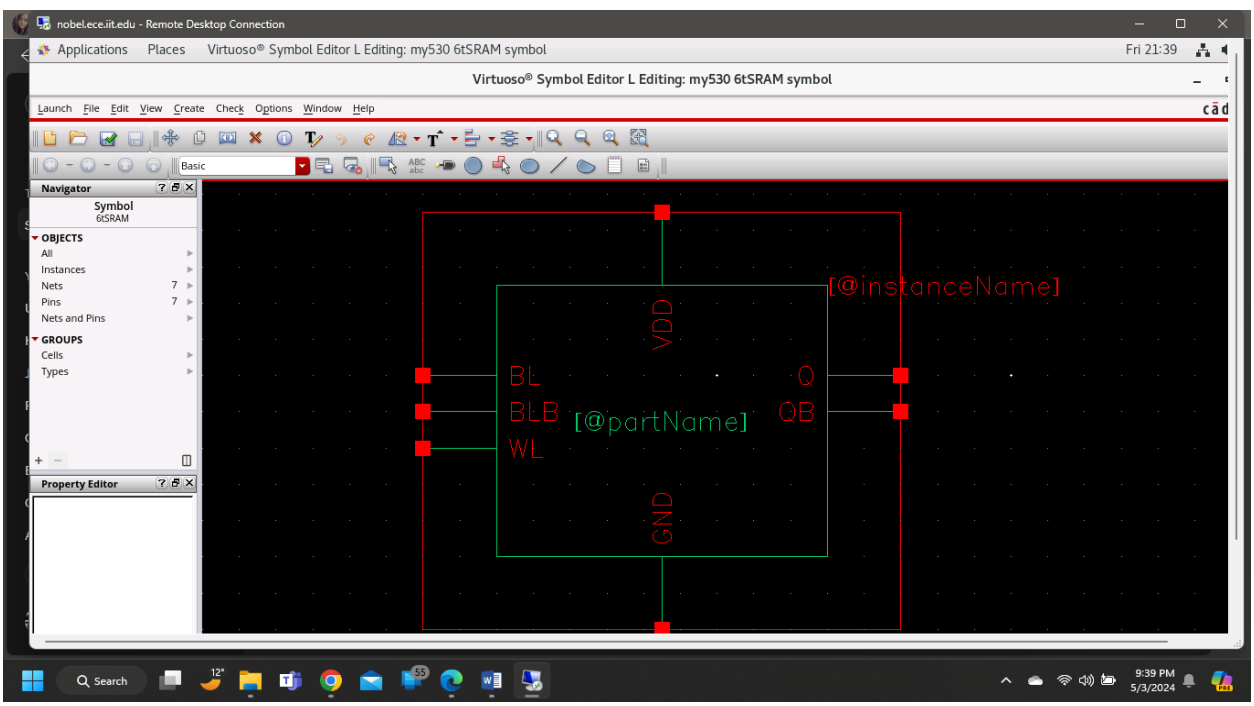

6TSRAM Symbol

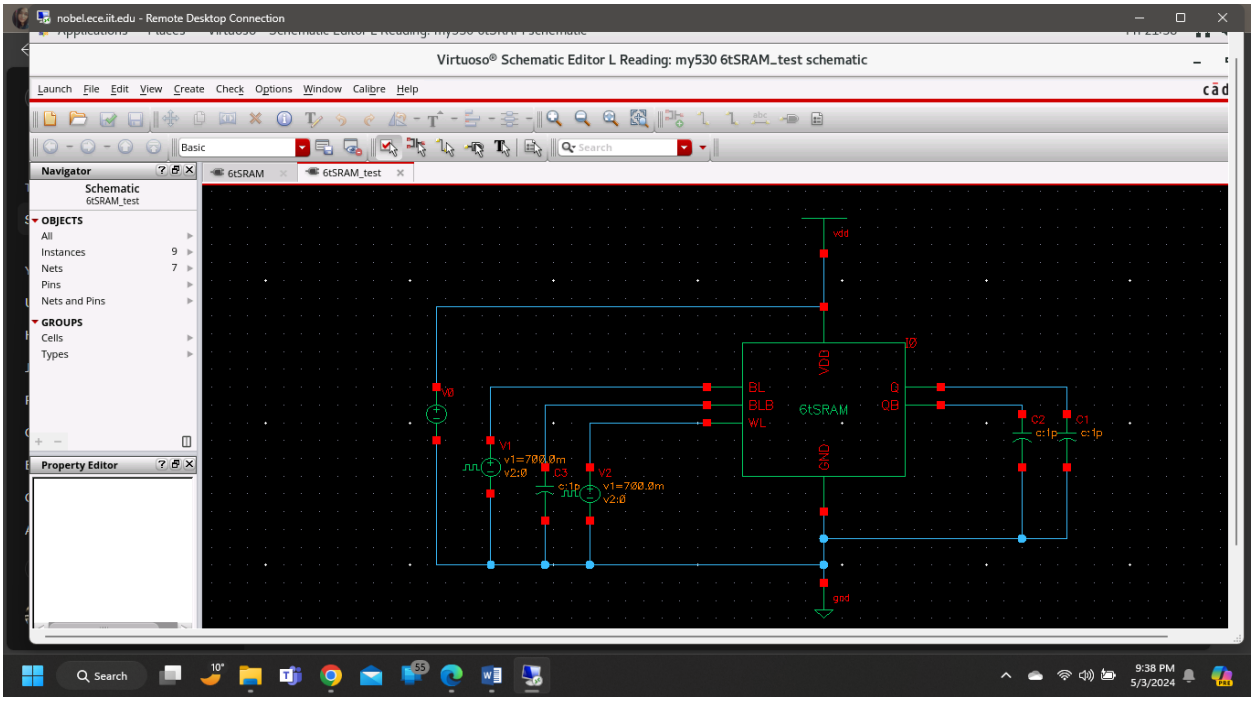

6TSRAM test Schematic

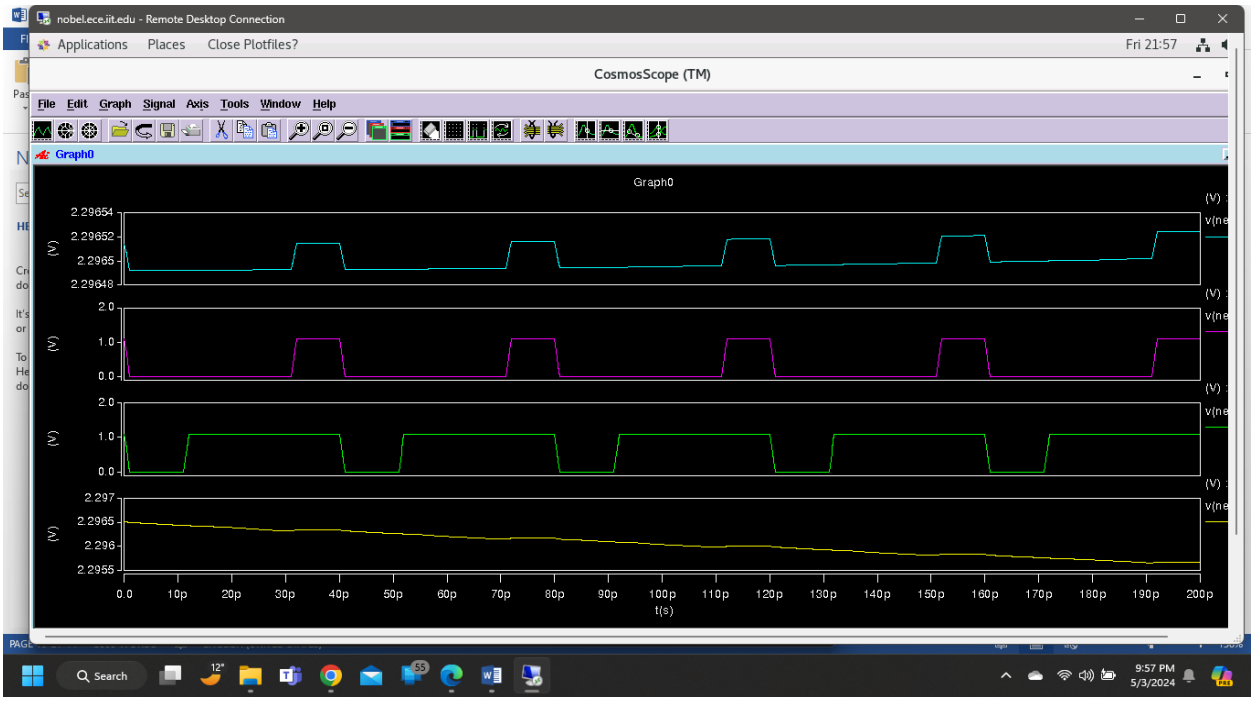

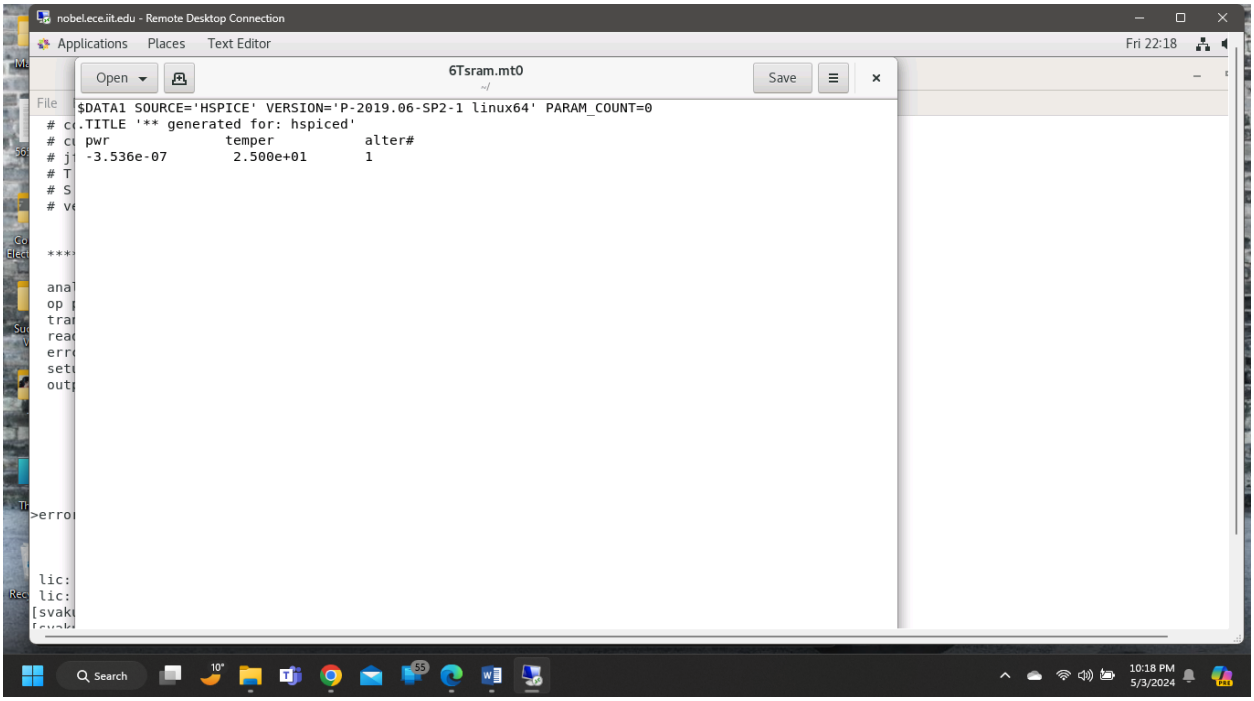

6TSRAM Results

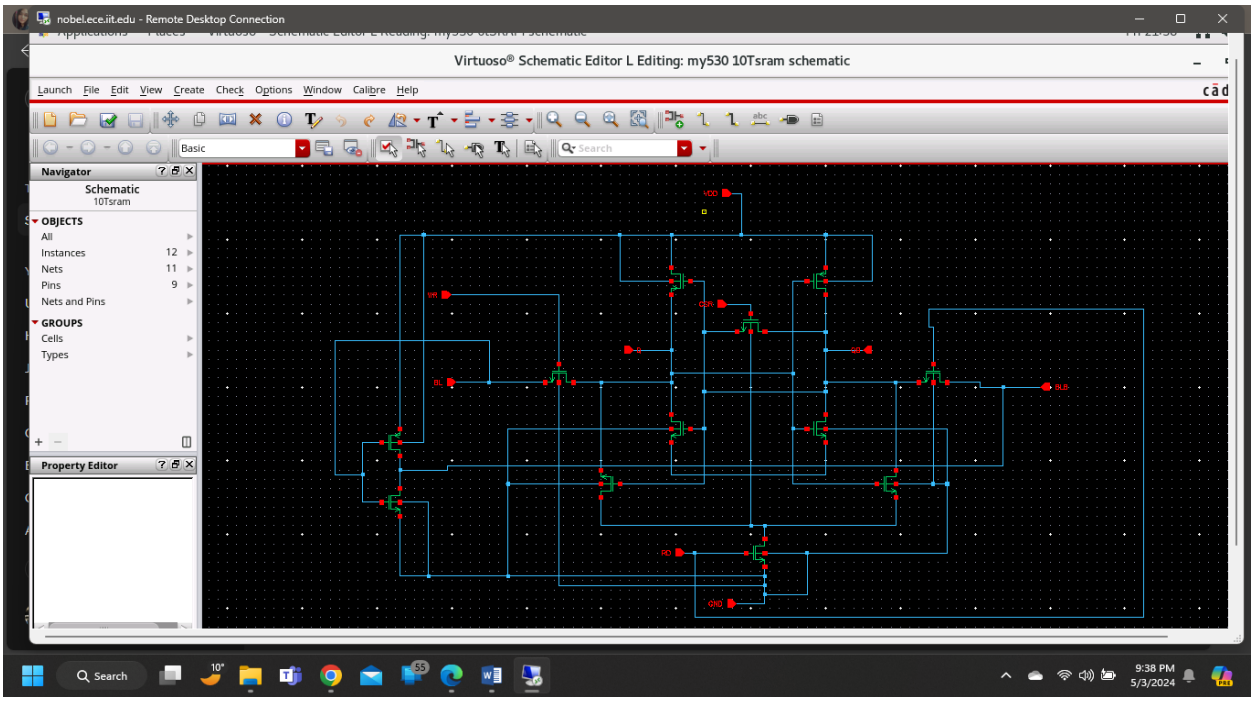

10TSRAM Schematic

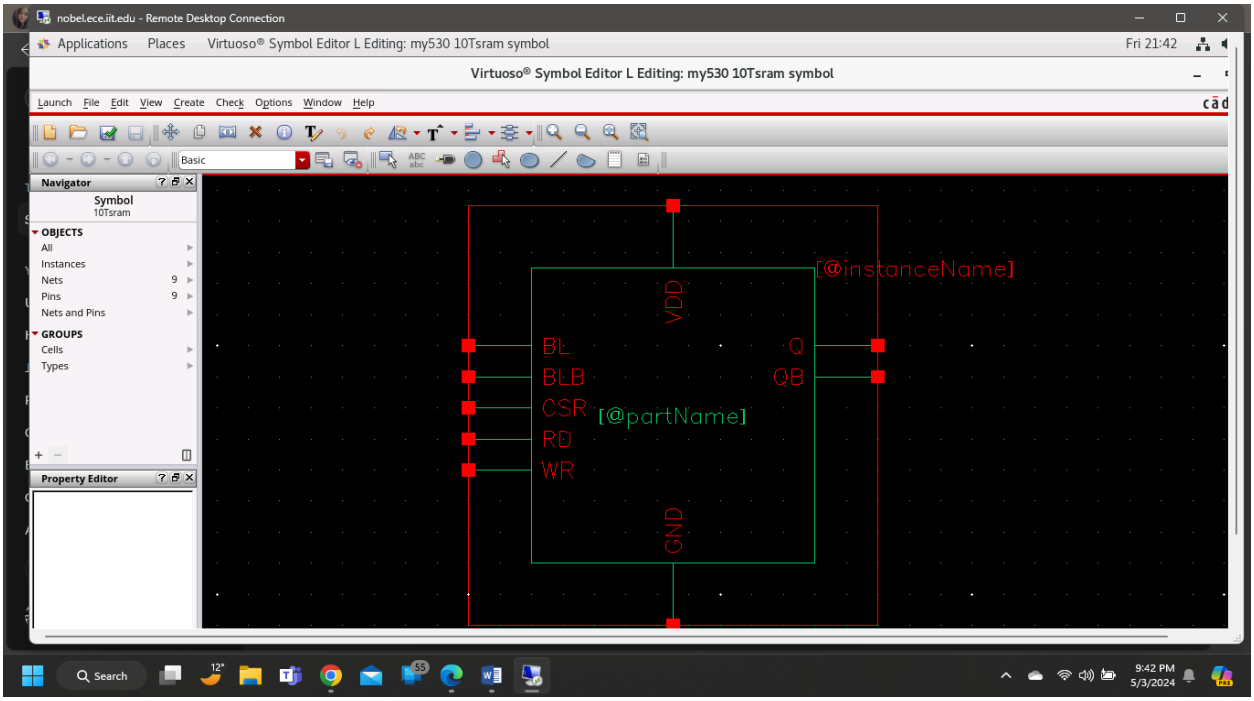

10SRAM Symbol

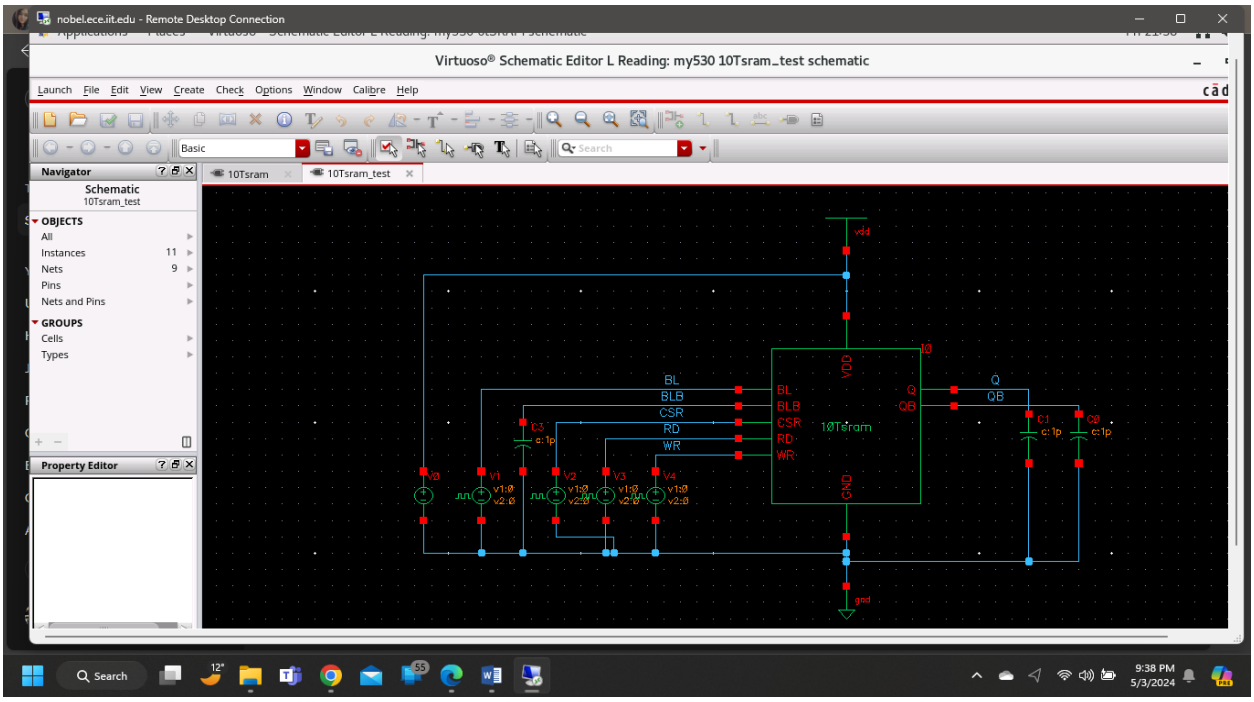

10TSRAM test Schematic

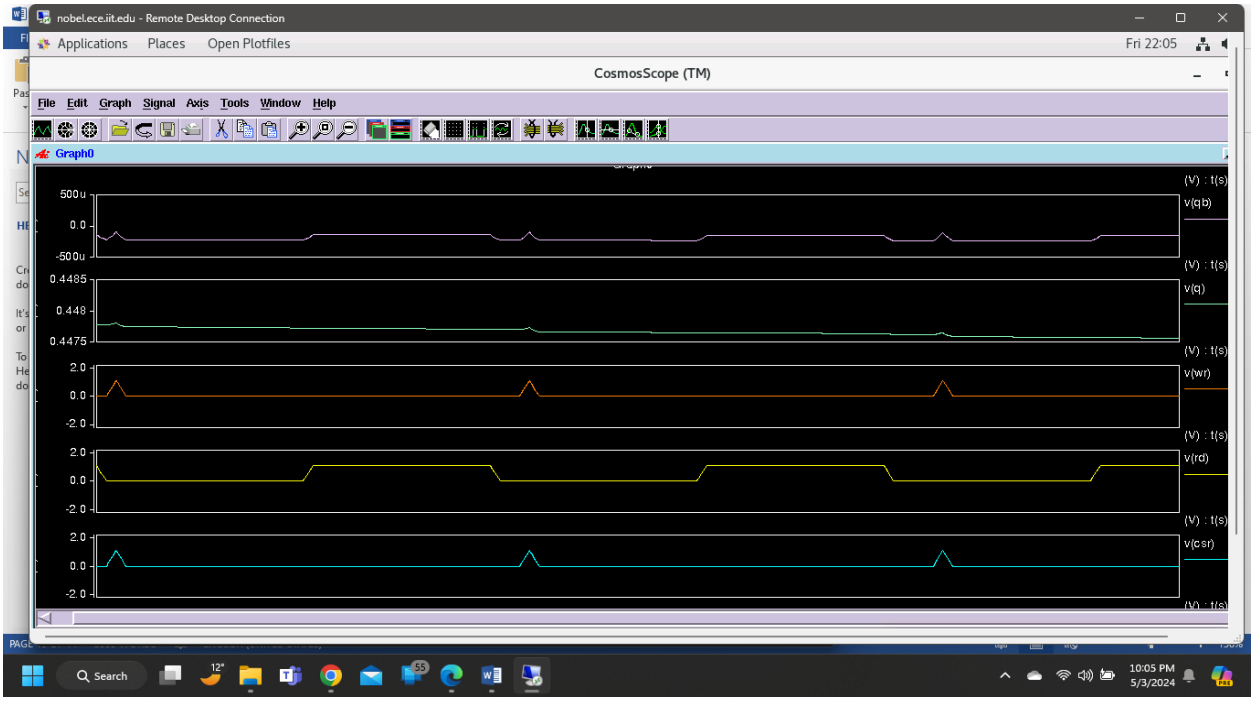
nobel.ece.iit.edu - Remote Desktop Connection
Applications Places Open Plotfiles
Fri 22:05
CosmosScope (TM)
File Edit Graph Signal Axis Tools Window Help
Graph0
500u
0.0
-500u
0.4485
0.448
0.4475
2.0
0.0
-2.0
(V) : t(s)
v(qb)
v(q)
v(wr)
v(rd)
v(csr)
Search
10:05 PM
5/3/2024

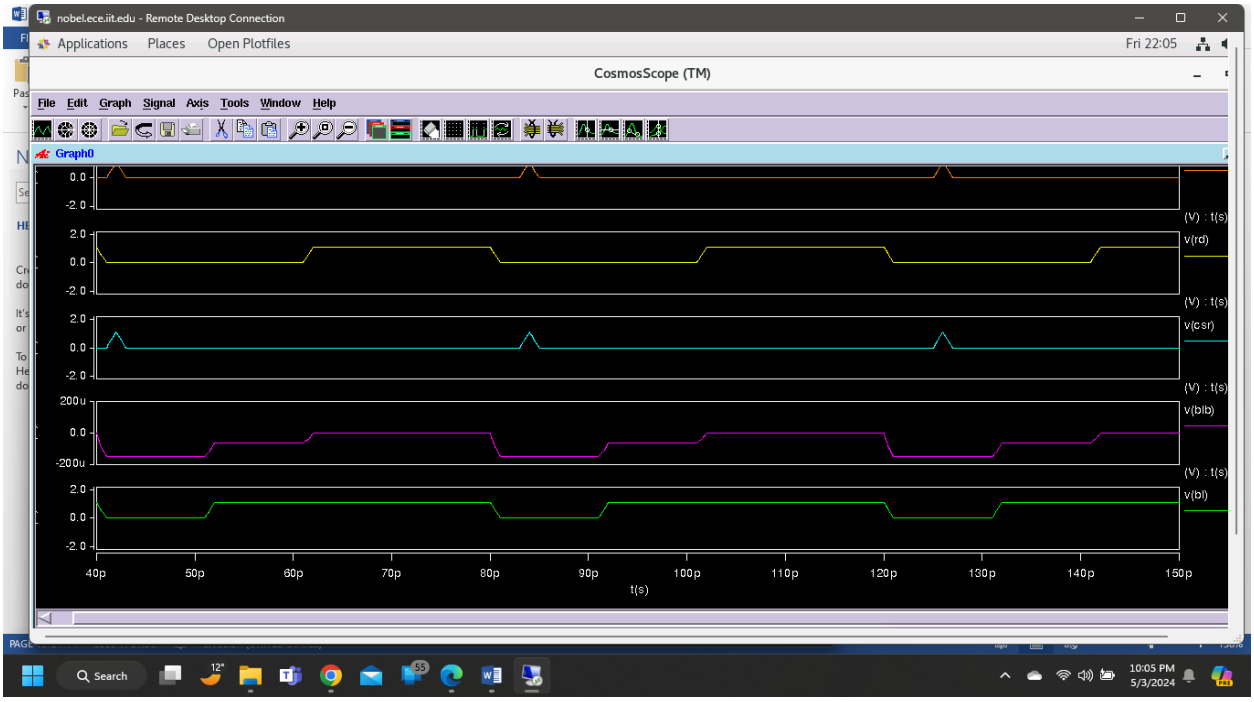
nobel.ece.iit.edu - Remote Desktop Connection
Applications Places Open Plotfiles
Fri 22:05
CosmosScope (TM)
File Edit Graph Signal Axis Tools Window Help
Graph0
0.0
-2.0
2.0
200u
-200u
(V) : t(s)
v(rd)
v(csr)
v(blb)
v(bl)
40p
50p
60p
70p
80p
90p
100p
110p
120p
130p
140p
150p
t(s)
Search
10:05 PM
5/3/2024

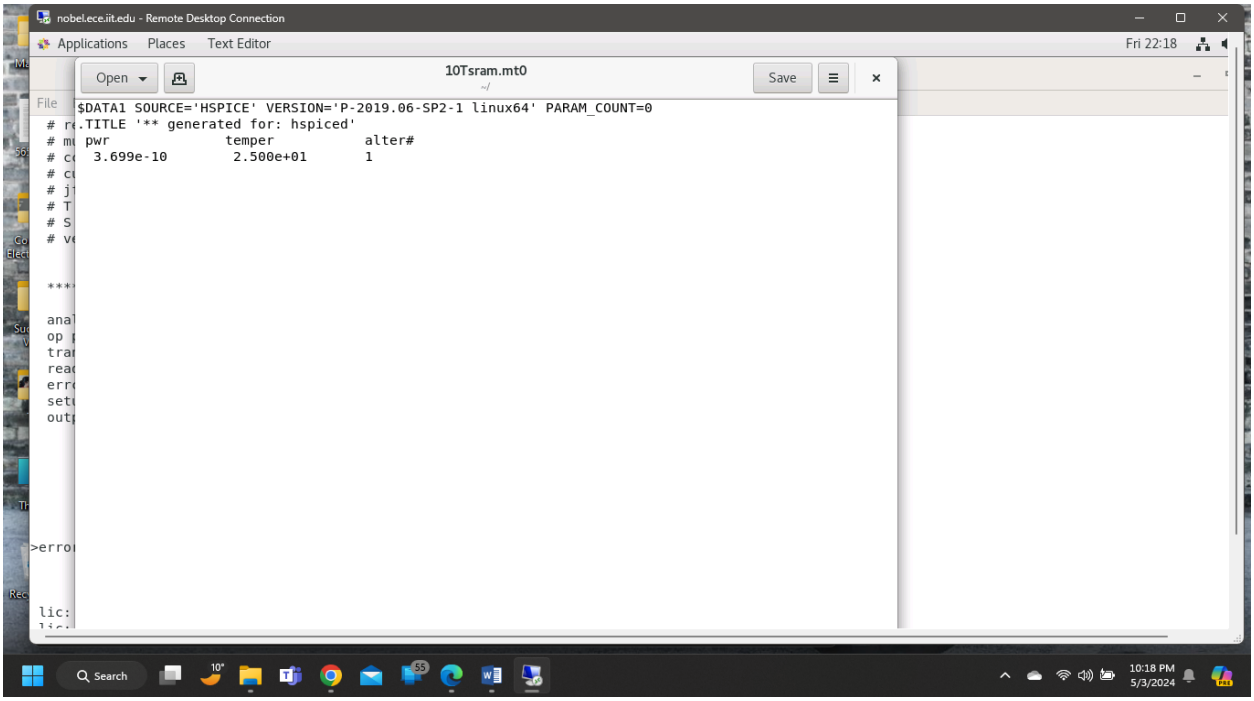

10TSRAM Results

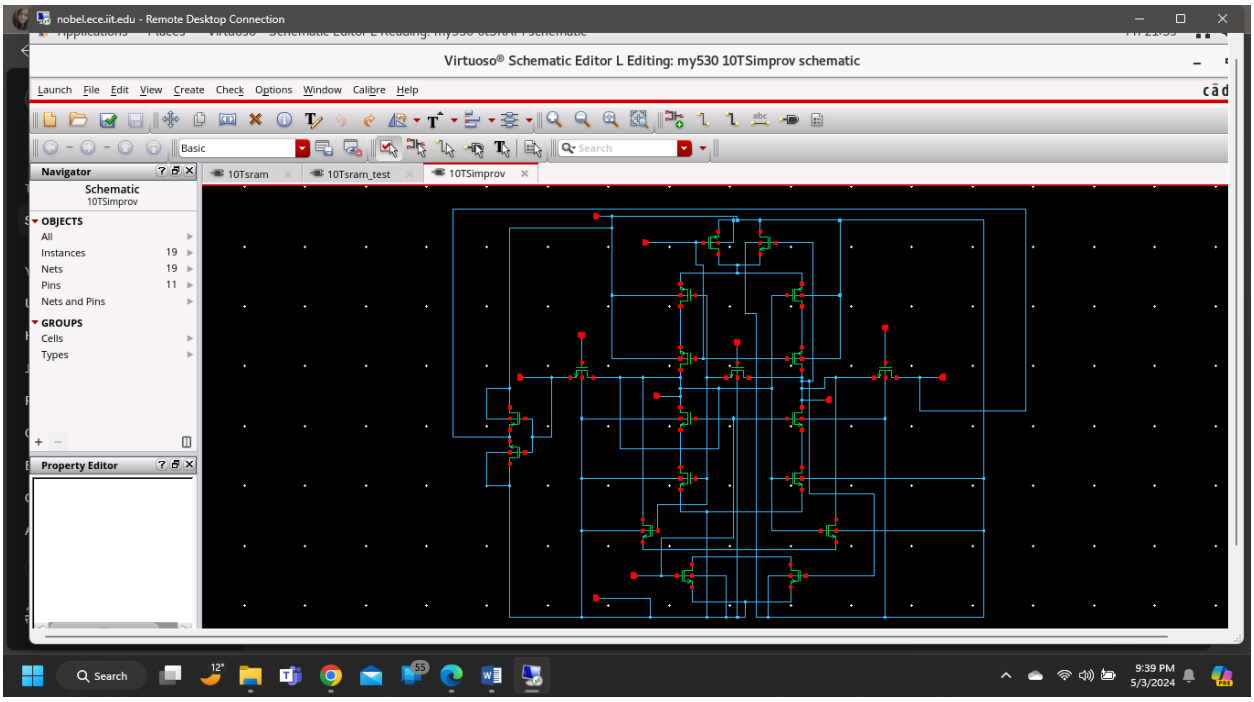

Proposed 10SRAM Schematic

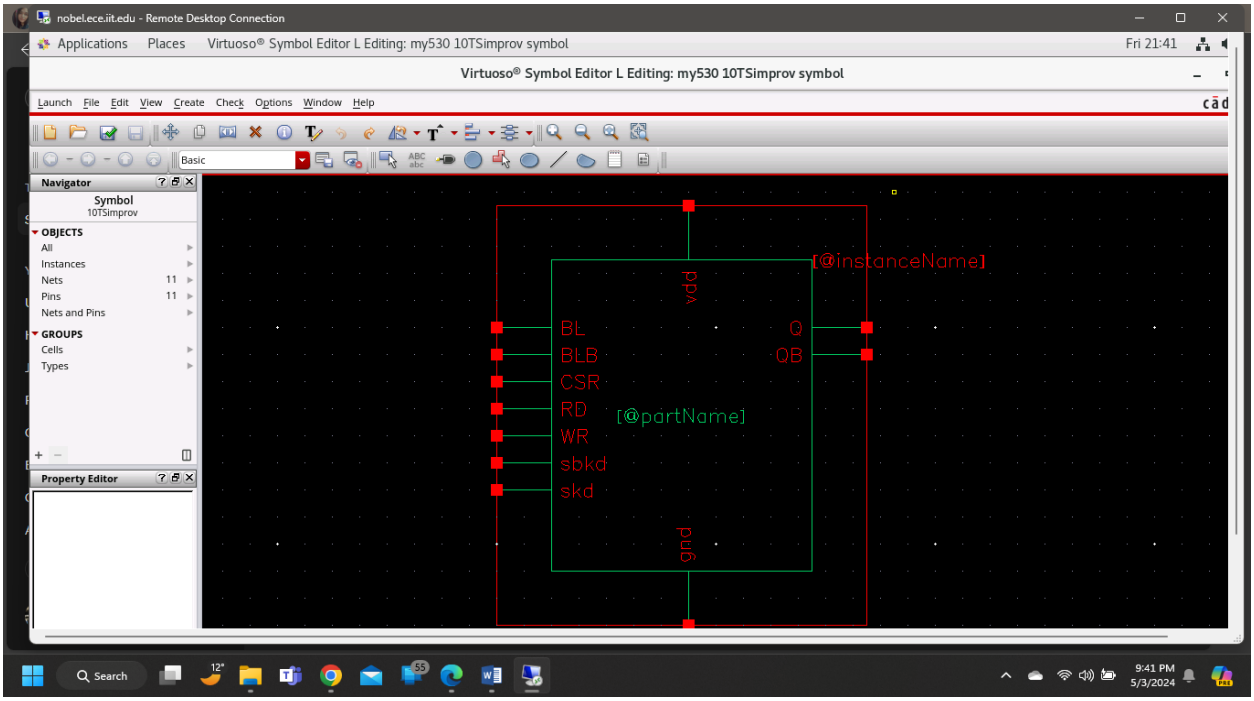

Proposed 10SRAM Symbol

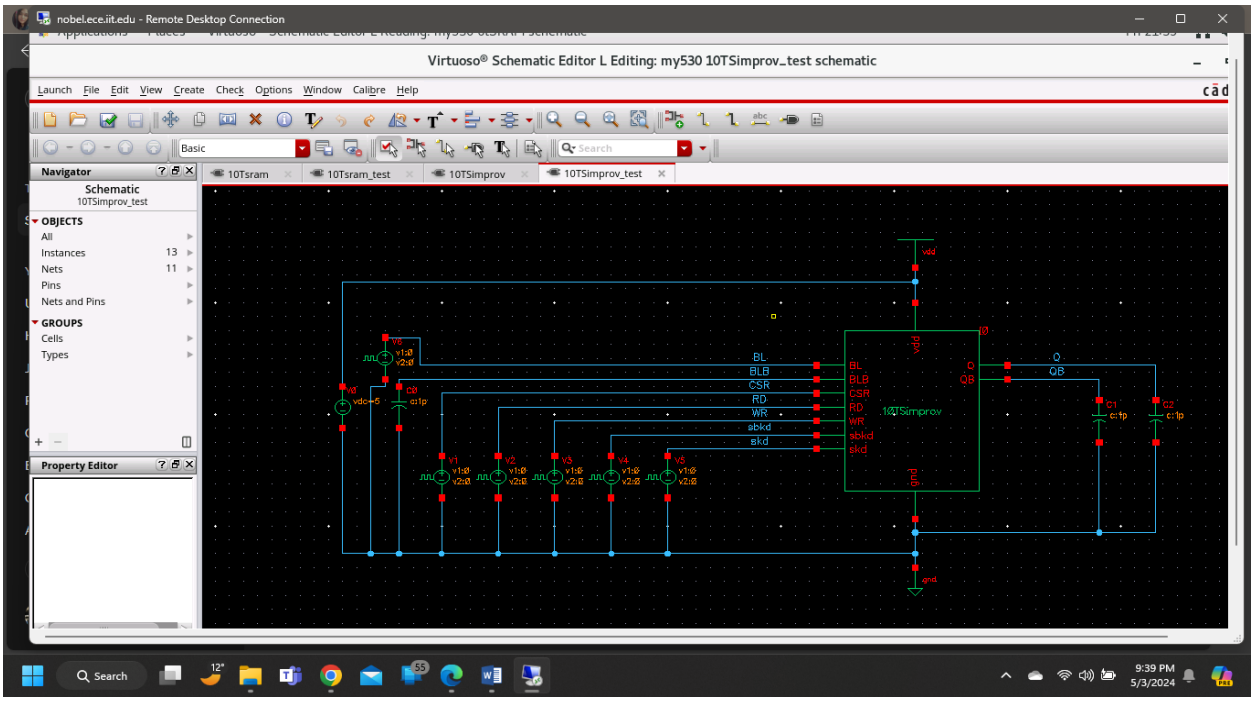

Proposed 10SRAM test Schematic

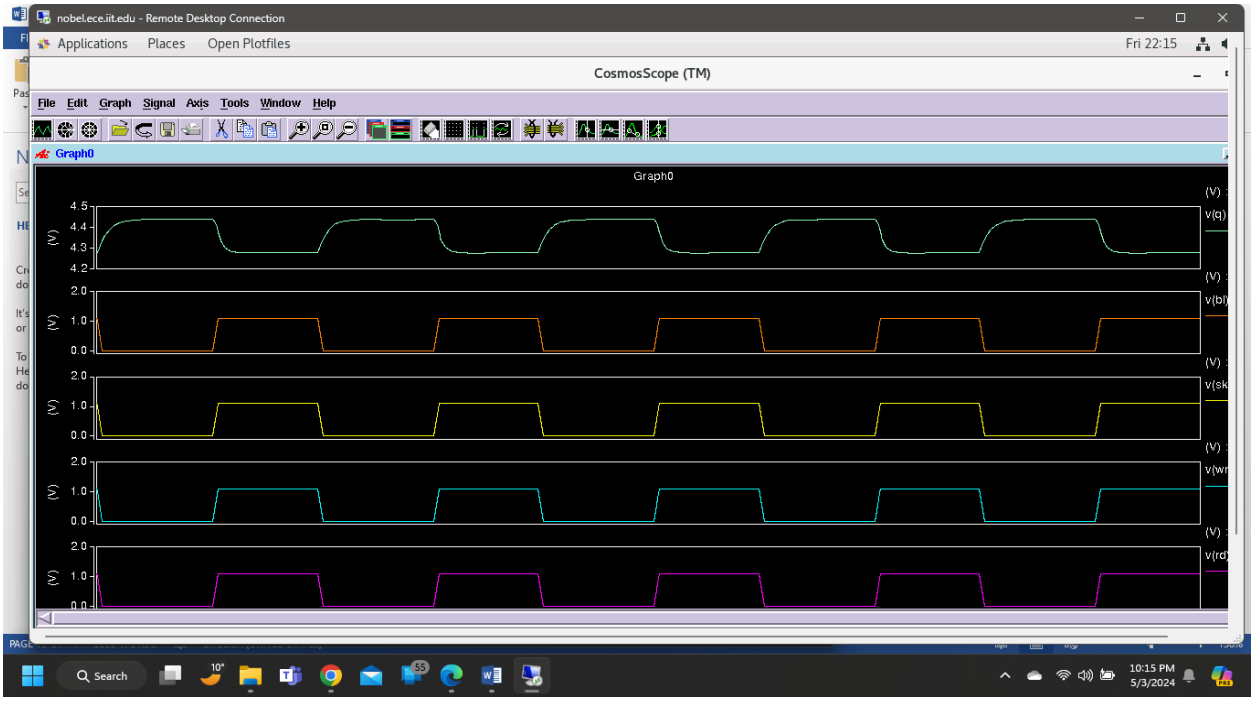
nobel.ece.iit.edu - Remote Desktop Connection
Applications Places Open Plotfiles
Fri 22:15
CosmosScope (TM)
File Edit Graph Signal Axis Tools Window Help
Graph0
Graph0
v(q)
v(bl)
v(sk
v(wr
v(rd)
(V)
Search
10:15 PM
5/3/2024

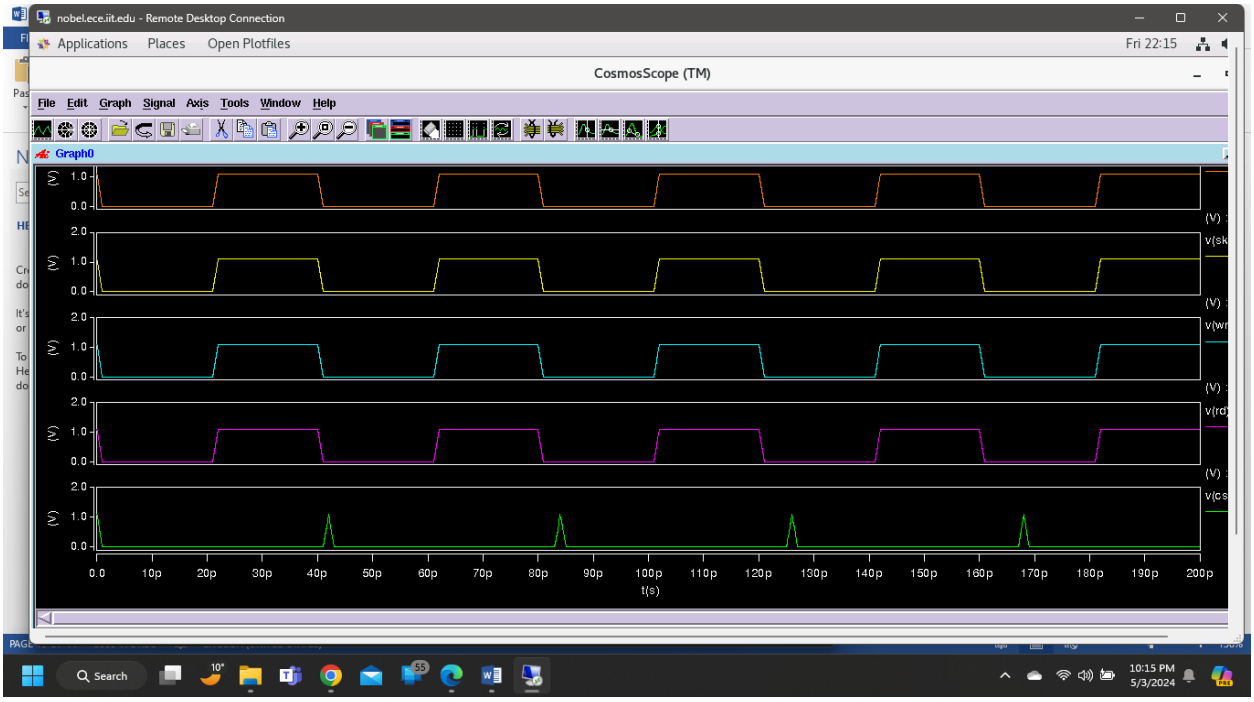
nobel.ece.iit.edu - Remote Desktop Connection
Applications Places Open Plotfiles
Fri 22:15
CosmosScope (TM)
File Edit Graph Signal Axis Tools Window Help
Graph0
v(sk
v(wr
v(rd)
v(cs
(V)
0.0 10p 20p 30p 40p 50p 60p 70p 80p 90p 100p 110p 120p 130p 140p 150p 160p 170p 180p 190p 200p
t(s)
Search
10:15 PM
5/3/2024

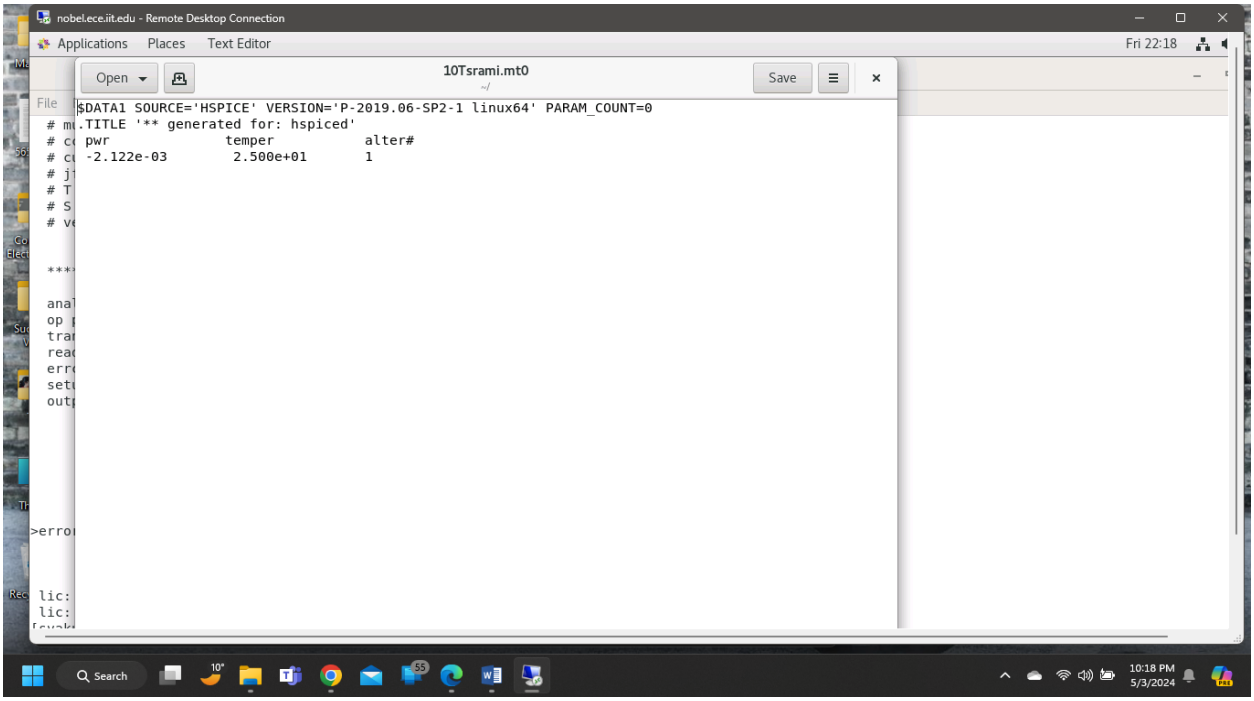

Proposed 10SRAM results

REFERENCES

https://ieeexplore.ieee.org/stamp/stamp.jsp?tp=&arnumber=10134887

https://ietresearch.onlinelibrary.wiley.com/doi/10.1049/cds2.12006

https://iopscience.iop.org/article/10.1088/1757-899X/1272/1/012007/pdf

https://ieeexplore.ieee.org/stamp/stamp.jsp?tp=&arnumber=9396811

Appendix

6TSRAM

```
** Generated for: hspiceD
** Generated on: May  3 17:54:47 2024
** Design library name: my530
** Design cell name: 6tSRAM_test
** Design view name: schematic
.GLOBAL vdd!



.PROBE TRAN
+    V(net8)
+    V(net9)
+    V(net7)
+    V(net6)
+    V(net5)
.TRAN 1e-12 200e-12 START=0.0


.TEMP 25.0
.OPTION
+    ARTIST=2
+    INGOLD=2
+    PARHIER=LOCAL
```

```
+    PSF=2

+    POST

.INCLUDE "/apps/FreePDK45/ncsu_basekit/models/hspice/hspice_nom.include"


** Library name: my530

** Cell name: 6tSRAM

** View name: schematic

.subckt my530_6tSRAM_schematic bl blb gnd q qb vdd wl

m0 blb bl gnd gnd NMOS_VTH L=50e-9 W=90e-9 AD=9.45e-15 AS=9.45e-15 PD=300e-9
PS=300e-9 M=1

mn4 blb wl qb gnd NMOS_VTH L=50e-9 W=90e-9 AD=9.45e-15 AS=9.45e-15 PD=300e-9
PS=300e-9 M=1

mn1 qb q gnd gnd NMOS_VTH L=50e-9 W=90e-9 AD=9.45e-15 AS=9.45e-15 PD=300e-9
PS=300e-9 M=1

mn2 q qb gnd gnd NMOS_VTH L=50e-9 W=90e-9 AD=9.45e-15 AS=9.45e-15 PD=300e-9
PS=300e-9 M=1

mn3 q wl bl gnd NMOS_VTH L=50e-9 W=90e-9 AD=9.45e-15 AS=9.45e-15 PD=300e-9
PS=300e-9 M=1

mpi blb bl vdd vdd PMOS_VTH L=50e-9 W=90e-9 AD=9.45e-15 AS=9.45e-15 PD=300e-9
PS=300e-9 M=1

mp1 qb q vdd vdd PMOS_VTH L=50e-9 W=90e-9 AD=9.45e-15 AS=9.45e-15 PD=300e-9
PS=300e-9 M=1

mp2 q qb vdd vdd PMOS_VTH L=50e-9 W=90e-9 AD=9.45e-15 AS=9.45e-15 PD=300e-9
PS=300e-9 M=1

.ends my530_6tSRAM_schematic
```

```
** End of subcircuit definition.


** Library name: my530

** Cell name: 6tSRAM_test

** View name: schematic

xi0 net5 net6 0 net9 net8 vdd! net7 my530_6tSRAM_schematic

v0 vdd! 0 DC=5

v2 net7 0 PULSE 1.1 0 0 1e-12 1e-12 30e-12 40e-12

v1 net5 0 PULSE 1.1 0 0 1e-12 1e-12 10e-12 40e-12

c3 net6 0 1e-12

c2 net8 0 1e-12

c1 net9 0 1e-12

.measure pwr AVG P(c1) FROM=0 TO=40p

.measure pwr AVG P(c2) FROM=0 TO=40p

.END

10TSRAM

** Generated for: hspiceD

** Generated on: May  3 20:05:16 2024

** Design library name: my530

** Design cell name: 10Tsram_test

** Design view name: schematic

.GLOBAL vdd!
```

```
.PROBE TRAN
+    V(qb)
+    V(q)
+    V(wr)
+    V(rd)
+    V(csr)
+    V(blb)
+    V(bl)
.TRAN 1e-12 200e-12 START=0.0

.TEMP 25.0
.OPTION
+    ARTIST=2
+    INGOLD=2
+    PARHIER=LOCAL
+    PSF=2
+    POST
.INCLUDE "/apps/FreePDK45/ncsu_basekit/models/hspice/hspice_nom.include"

** Library name: my530
** Cell name: 10Tsram
** View name: schematic
```

```
.subckt my530_10Tsram_schematic bl blb csr gnd q qb rd vdd wr

mni blb bl gnd gnd NMOS_VTH L=50e-9 W=90e-9 AD=9.45e-15 AS=9.45e-15 PD=300e-9
PS=300e-9 M=1

mnr net012 rd gnd gnd NMOS_VTH L=50e-9 W=90e-9 AD=9.45e-15 AS=9.45e-15 PD=300e-9
PS=300e-9 M=1

mnc qb csr qb net012 NMOS_VTH L=50e-9 W=90e-9 AD=9.45e-15 AS=9.45e-15 PD=300e-9
PS=300e-9 M=1

mn3 blb rd qb gnd NMOS_VTH L=50e-9 W=90e-9 AD=9.45e-15 AS=9.45e-15 PD=300e-9
PS=300e-9 M=1

mn5 qb q net012 gnd NMOS_VTH L=50e-9 W=90e-9 AD=9.45e-15 AS=9.45e-15 PD=300e-9
PS=300e-9 M=1

mn1 qb q net27 gnd NMOS_VTH L=50e-9 W=90e-9 AD=9.45e-15 AS=9.45e-15 PD=300e-9
PS=300e-9 M=1

mn6 net012 qb q gnd NMOS_VTH L=50e-9 W=90e-9 AD=9.45e-15 AS=9.45e-15 PD=300e-9
PS=300e-9 M=1

mn2 q qb net27 gnd NMOS_VTH L=50e-9 W=90e-9 AD=9.45e-15 AS=9.45e-15 PD=300e-9
PS=300e-9 M=1

mn4 q wr bl gnd NMOS_VTH L=50e-9 W=90e-9 AD=9.45e-15 AS=9.45e-15 PD=300e-9
PS=300e-9 M=1

mpi blb bl vdd vdd PMOS_VTH L=50e-9 W=90e-9 AD=9.45e-15 AS=9.45e-15 PD=300e-9
PS=300e-9 M=1

mp1 qb q vdd vdd PMOS_VTH L=50e-9 W=90e-9 AD=9.45e-15 AS=9.45e-15 PD=300e-9
PS=300e-9 M=1

mp2 vdd qb q vdd PMOS_VTH L=50e-9 W=90e-9 AD=9.45e-15 AS=9.45e-15 PD=300e-9
PS=300e-9 M=1

.ends my530_10Tsram_schematic
```

```
** End of subcircuit definition.


** Library name: my530

** Cell name: 10Tsram_test

** View name: schematic

xi0 bl blb csr 0 q qb rd vdd! wr my530_10Tsram_schematic

v0 vdd! 0

v4 wr 0 PULSE 1.1 0 0 1e-12 1e-12 40e-12 40e-12

v3 rd 0 PULSE 1.1 0 0 1e-12 1e-12 20e-12 40e-12

v2 csr 0 PULSE 1.1 0 0 1e-12 1e-12 40e-12 40e-12

v1 bl 0 PULSE 1.1 0 0 1e-12 1e-12 10e-12 40e-12

c3 blb 0 1e-12

c1 q 0 1e-12

c0 qb 0 1e-12

.measure pwr AVG P(c1) FROM=0 TO=40p

.measure pwr AVG P(c0) FROM=0 TO=40p

.END

Proposed 10tsram

** Generated for: hspiceD

** Generated on: May  3 21:22:18 2024

** Design library name: my530

** Design cell name: 10TSimprov_test

** Design view name: schematic
```

```
.GLOBAL vdd!



.PROBE TRAN
+    V(qb)
+    V(q)
+    V(skd)
+    V(sbkd)
+    V(wr)
+    V(rd)
+    V(csr)
+    V(blb)
+    V(bl)
.TRAN 1e-12 200e-12 START=0.0


.TEMP 25.0
.OPTION
+    ARTIST=2
+    INGOLD=2
+    PARHIER=LOCAL
+    PSF=2
+    POST
.INCLUDE "/apps/FreePDK45/ncsu_basekit/models/hspice/hspice_nom.include"
```

** Library name: my530

** Cell name: 10TSimprov

** View name: schematic

.subckt my530_10TSimprov_schematic bl blb csr q qb rd wr gnd sbkd skd vdd

mni gnd bl blb gnd NMOS_VTH L=50e-9 W=90e-9 AD=9.45e-15 AS=9.45e-15 PD=300e-9 PS=300e-9 M=1

mn4 q wr bl gnd NMOS_VTH L=50e-9 W=90e-9 AD=9.45e-15 AS=9.45e-15 PD=300e-9 PS=300e-9 M=1

mn3 blb rd qb vdd NMOS_VTH L=50e-9 W=90e-9 AD=9.45e-15 AS=9.45e-15 PD=300e-9 PS=300e-9 M=1

mn7 qb csr net50 gnd NMOS_VTH L=50e-9 W=90e-9 AD=9.45e-15 AS=9.45e-15 PD=300e-9 PS=300e-9 M=1

mn11 vdd qb net35 vdd NMOS_VTH L=50e-9 W=90e-9 AD=9.45e-15 AS=9.45e-15 PD=300e-9 PS=300e-9 M=1

mn8 qb sbkd net59 vdd NMOS_VTH L=50e-9 W=90e-9 AD=9.45e-15 AS=9.45e-15 PD=300e-9 PS=300e-9 M=1

mn9 q sbkd net60 gnd NMOS_VTH L=50e-9 W=90e-9 AD=9.45e-15 AS=9.45e-15 PD=300e-9 PS=300e-9 M=1

mn1 net59 q gnd vdd NMOS_VTH L=50e-9 W=90e-9 AD=9.45e-15 AS=9.45e-15 PD=300e-9 PS=300e-9 M=1

mn2 net60 net50 gnd gnd NMOS_VTH L=50e-9 W=90e-9 AD=9.45e-15 AS=9.45e-15 PD=300e-9 PS=300e-9 M=1

mn5 qb q net49 vdd NMOS_VTH L=50e-9 W=90e-9 AD=9.45e-15 AS=9.45e-15 PD=300e-9 PS=300e-9 M=1

```
mn6 q net50 net49 gnd NMOS_VTH L=50e-9 W=90e-9 AD=9.45e-15 AS=9.45e-15 PD=300e-9 PS=300e-9 M=1

mn10 net51 sbkd gnd gnd NMOS_VTH L=50e-9 W=90e-9 AD=9.45e-15 AS=9.45e-15 PD=300e-9 PS=300e-9 M=1

mpi vdd bl blb vdd PMOS_VTH L=50e-9 W=90e-9 AD=9.45e-15 AS=9.45e-15 PD=300e-9 PS=300e-9 M=1

mp6 net35 skd vdd vdd PMOS_VTH L=50e-9 W=90e-9 AD=9.45e-15 AS=9.45e-15 PD=300e-9 PS=300e-9 M=1

mp5 net51 qb gnd vdd PMOS_VTH L=50e-9 W=90e-9 AD=9.45e-15 AS=9.45e-15 PD=300e-9 PS=300e-9 M=1

mp1 net58 q net35 vdd PMOS_VTH L=50e-9 W=90e-9 AD=9.45e-15 AS=9.45e-15 PD=300e-9 PS=300e-9 M=1

mp2 net61 net50 net35 vdd PMOS_VTH L=50e-9 W=90e-9 AD=9.45e-15 AS=9.45e-15 PD=300e-9 PS=300e-9 M=1

mp4 qb skd net58 vdd PMOS_VTH L=50e-9 W=90e-9 AD=9.45e-15 AS=9.45e-15 PD=300e-9 PS=300e-9 M=1

mp3 q skd net61 vdd PMOS_VTH L=50e-9 W=90e-9 AD=9.45e-15 AS=9.45e-15 PD=300e-9 PS=300e-9 M=1

.ends my530_10TSimprov_schematic

** End of subcircuit definition.


** Library name: my530

** Cell name: 10TSimprov_test

** View name: schematic

xi0 bl blb csr q qb rd wr 0 sbkd skd vdd! my530_10TSimprov_schematic
```

```
v0 vdd! 0 DC=5

c2 q 0 1e-12

c1 qb 0 1e-12

c0 blb 0 1e-12

v6 bl 0 PULSE 1.1 0 0 1e-12 1e-12 20e-12 80e-12

v5 skd 0 PULSE 1.1 0 0 1e-12 1e-12 10e-12 80e-12

v4 sbkd 0 PULSE 0 1.1 0 1e-12 1e-12 10e-12 80e-12

v3 wr 0 PULSE 1.1 0 0 1e-12 1e-12 40e-12 80e-12

v2 rd 0 PULSE 1.1 0 0 1e-12 1e-12 20e-12 80e-12

v1 csr 0 PULSE 1.1 0 0 1e-12 1e-12 40e-12 80e-12

.measure pwr AVG P(c2) FROM=0 TO=80e-12

.measure pwr AVG P(c1) FROM=0 TO=80e-12

.END
```